WATERCO

water, the liquid of life

HYDROSTORM

GEN2 ECO-VS 100

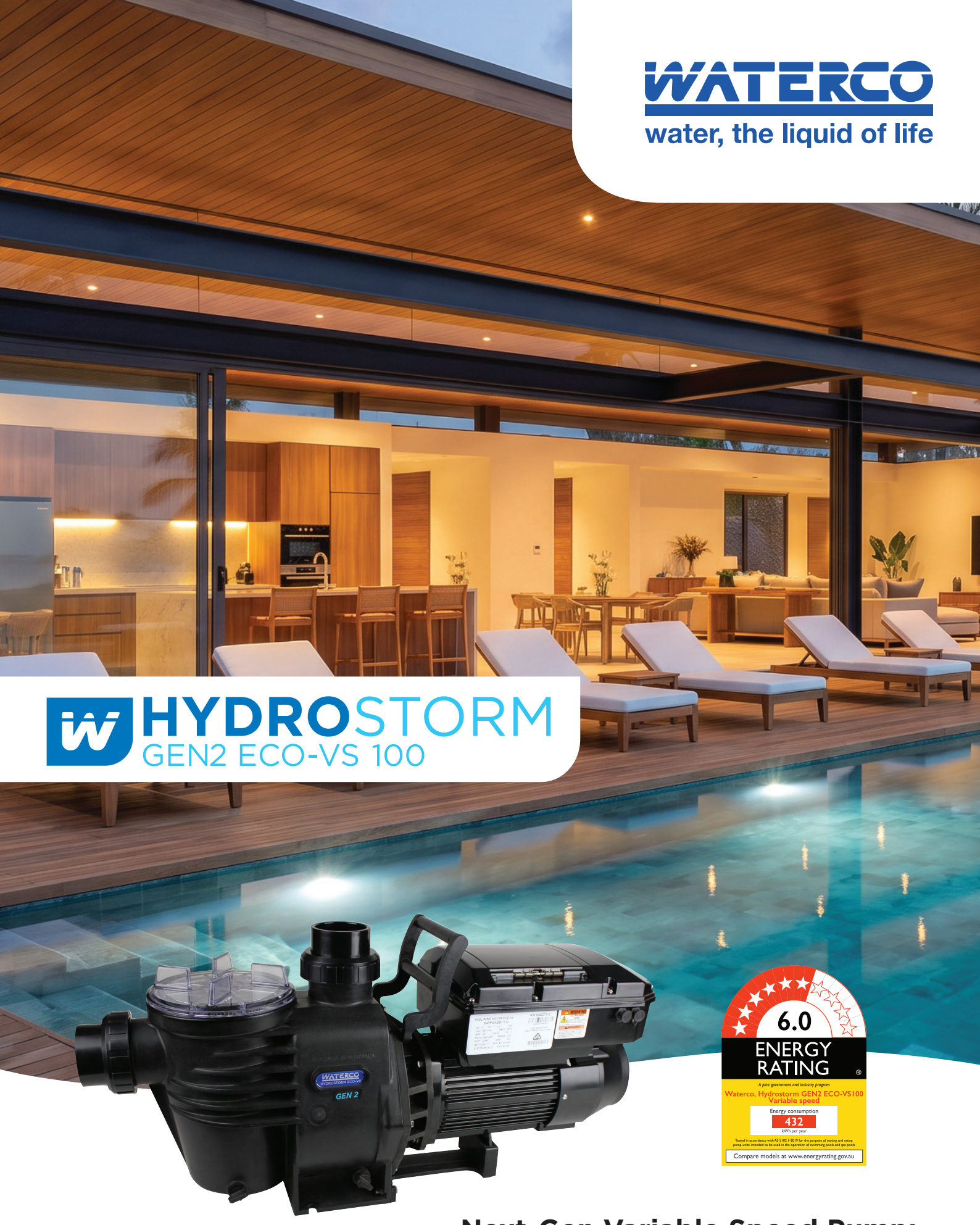

6.0

ENERGY RATING

A joint government and industry program

Waterco, Hydrostorm GEN2 ECO-VS100
Variable speed

Energy consumption

432

kWh per year

Tested in accordance with AS 5102.1-2019 for the purposes of testing and rating pump units intended to be used in the operation of swimming pools and spa pools

Compare models at www.energyrating.gov.au

Next-Gen Variable Speed Pump: Maximum Savings, Ultra-Quiet, Smart Control

HYDROSTORM
GEN2 ECO-VS 100

Equipped with a next-generation variable speed motor, the Hydrostorm ECO-VS delivers maximum energy savings, ultra-quiet performance, and seamless smart control.

- 6 Star Energy Rating
- Cut Energy Use by Over 80%
- Whisper-Quiet Operation (47 dBA)
- RS485 Smart Automation Control



6.0 ENERGY RATING

CLIMATE CARE CERTIFIED

enviropro SAVE TIME, WATER AND ENERGY.

PUMP PROTECTION BRACKET

3 YEAR WARRANTY

SAVE ENERGY

SAVE MONEY

Next-Generation Variable Speed Motor

Unlike conventional single-speed pumps, pool pumps don't always need to run at maximum flow. Because filtration accounts for 99% of run time, operating the Hydrostorm ECO-VS at lower speeds slashes energy usage.

By leveraging the Pump Affinity Laws, running the pump at lower speeds drastically cuts power demand—reducing your annual energy costs by over 80%.

Powered by advanced radial flux motor technology and precise variable speed control, the Hydrostorm ECO-VS operates efficiently to save you money without compromising water clarity.

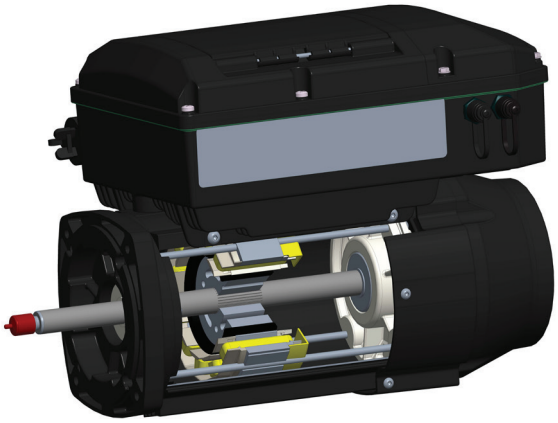

Cut Energy Use by Over 80%.

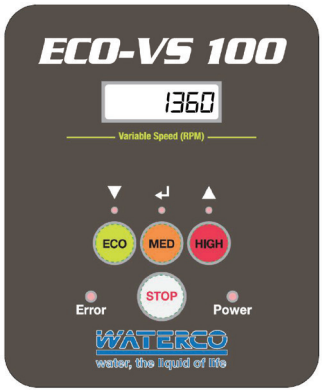

Perfectly match flow requirements and maximise energy savings.

Precision Speed Settings

Hydrostorm ECO-VS's 3 speed options cater for most pool functions.

- **High speed** - Vacuuming and backwash – 1% of the time
- **Medium speed** - Automatic pool cleaners
- **Low speed** - Filtration – 99% of the time
- **Variable speed** - Features 3 preset speeds (ECO, MED, HIGH) with 10 RPM incremental adjustments to precisely match your pool's flow requirements, maximising energy savings and minimising noise.

KEY FEATURES

The **Hydrostorm ECO-VS** features an advanced variable-speed motor engineered with cutting-edge manufacturing processes for ultra-quiet operation and extended durability.

1. Variable 3 speed control panel, IP55 rating
2. UV stabilised & corrosion resistant
3. 50mm quick connect barrel unions for UPVC pipe
4. Clear basket lid & large 2.1lt strainer basket
5. High grade carbon/ graphite mechanical seal with 316 stainless steel spring assembly
6. Strong single piece glass filled thermoplastic pump body
7. Drain plugs
8. Stable support base
9. Hydraulically efficient impeller and diffuser design
10. Fan cooled thermal overload protection
11. Heavy duty handle for easy carrying and locating the pump

Smart Integration & Active Flow Protection

i . **RS485 Smart Automation Control** Full RS485 protocol integration for pump speed, priming time, and function control via external controller.

ii. **Flow check Valve Port**: Dedicated 2-pin motor connection for the optional Waterco Flocheck Valve. When connected, it enables active flow detection to protect the pump against dry-running.



PUMP PROTECTION BRACKET

Motor protection bracket. Adds a 61mm air gap between the wet end and motor, featuring drain holes to safely evacuate mechanical seal leaks and prevent motor damage.

SAVE HUNDREDS OFF-PEAK WITHOUT KEEPING THE NEIGHBOUR AWAKE.

Ultra Quiet

Hydrostorm ECO-VS operates most economically and with the lowest noise level at its low speed setting. Its low speed setting significantly reduces the pump's vibration, motor noise and water turbulence to an ultra low 47 decibels (dBA).

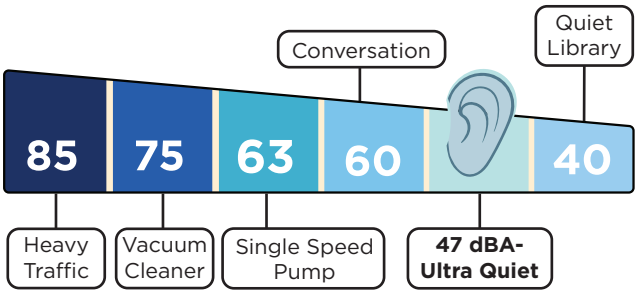

Off-Peak Operation

Its low noise levels enable it to be operated at times that are not allowable for conventional pool pumps. A Hydrostorm ECO-VS allows you to take advantage of off-peak electrical tariff periods, without upsetting your neighbours.

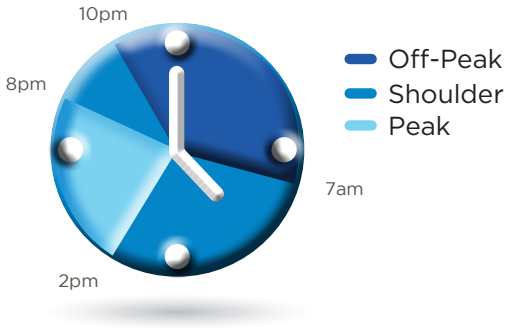

The Slow Flow Advantage

Lowering flow rate dramatically reduces energy use and water resistance. While the Hydrostorm ECO-VS runs longer at a lower flow, it operates far more efficiently. The slower rate also improves filtration for crystal-clear water and maximises the performance of chemical dosers and salt chlorinators.

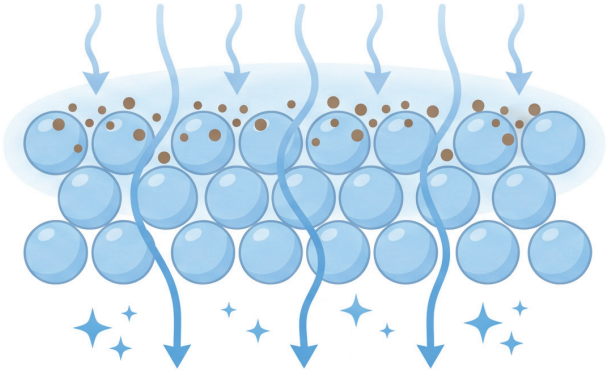



Hydrostorm GEN2 ECO-VS 100 Performance Curves

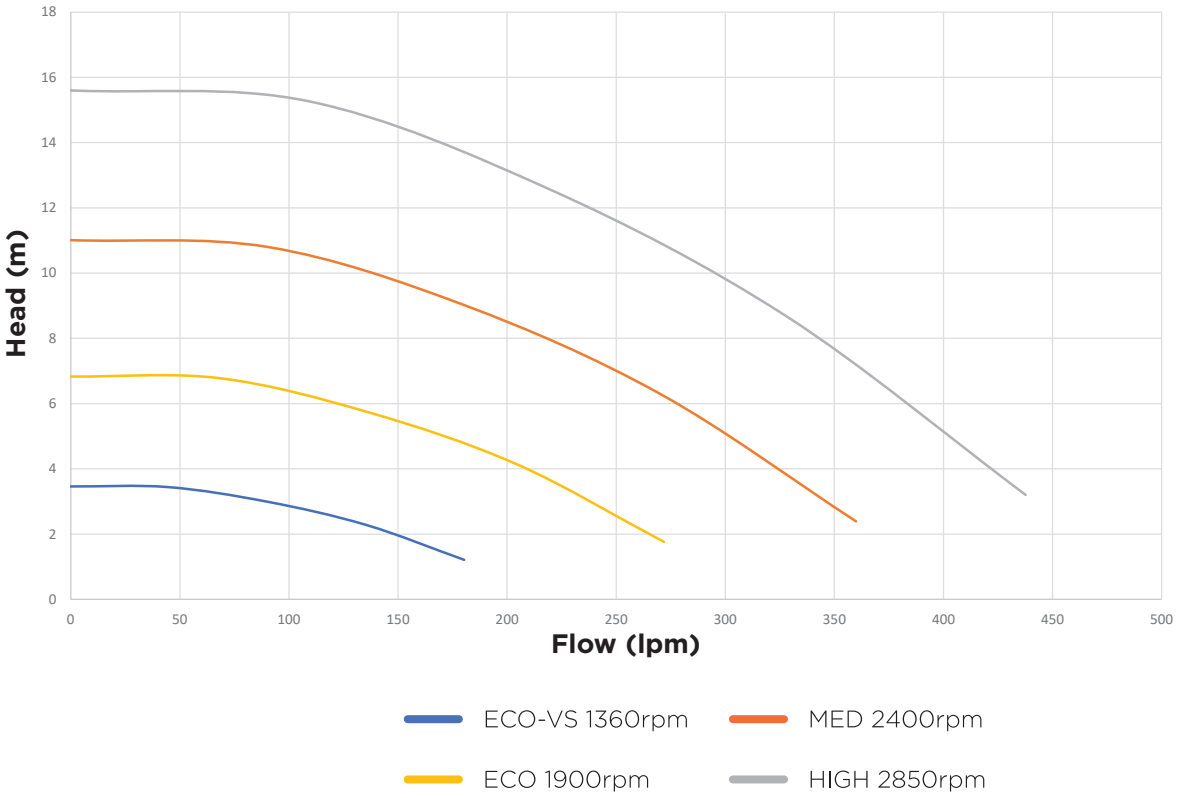

Hydrostorm GEN2 ECO-VS 100 Noise Levels

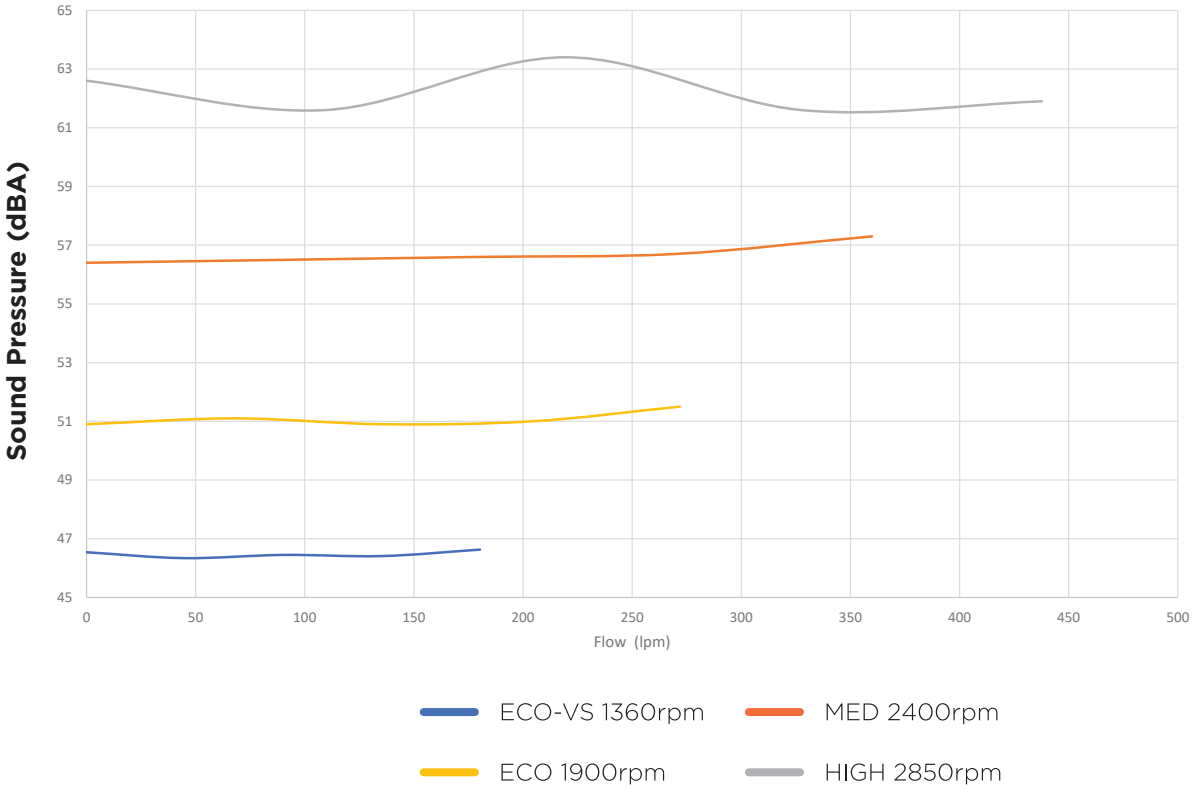

Technical Specification

Length (mm)	Height (mm)	Width (mm)	Packaged Weight (kg)	Inlet/Outlet (mm)	Strainer Basket (lt)
711	342	227	12	50	2.1

ECO-VS speed (1360rpm)

Pump Total Head (m)	FlowQ (l/min)	Input Power (kW)	Current (A)	Sound Pressure (dBA)
1.8	154.3	0.135	1.2	47
2.3	132.6	0.129	1.2	46
2.8	106.5	0.123	1.1	46

Medium speed (2400rpm)

Pump Total Head (m)	FlowQ (l/min)	Input Power (kW)	Current (A)	Sound Pressure (dBA)
5.3	291.3	0.652	4.6	57
7.0	253.8	0.616	4.5	57
9.9	143.5	0.483	3.6	57

ECO speed (1900rpm)

Pump Total Head (m)	FlowQ (l/min)	Input Power (kW)	Current (A)	Sound Pressure (dBA)
4.7	187.0	0.323	2.5	51
5.5	150.0	0.290	2.3	51
6.3	109.8	0.245	1.9	51

High speed (2850rpm)

Pump Total Head (m)	FlowQ (l/min)	Input Power (kW)	Current (A)	Sound Pressure (dBA)
7.3	360.9	1.090	7.4	62
11.8	245.7	0.942	6.4	63
15.2	126.1	0.684	4.7	62

Dimensions (mm)

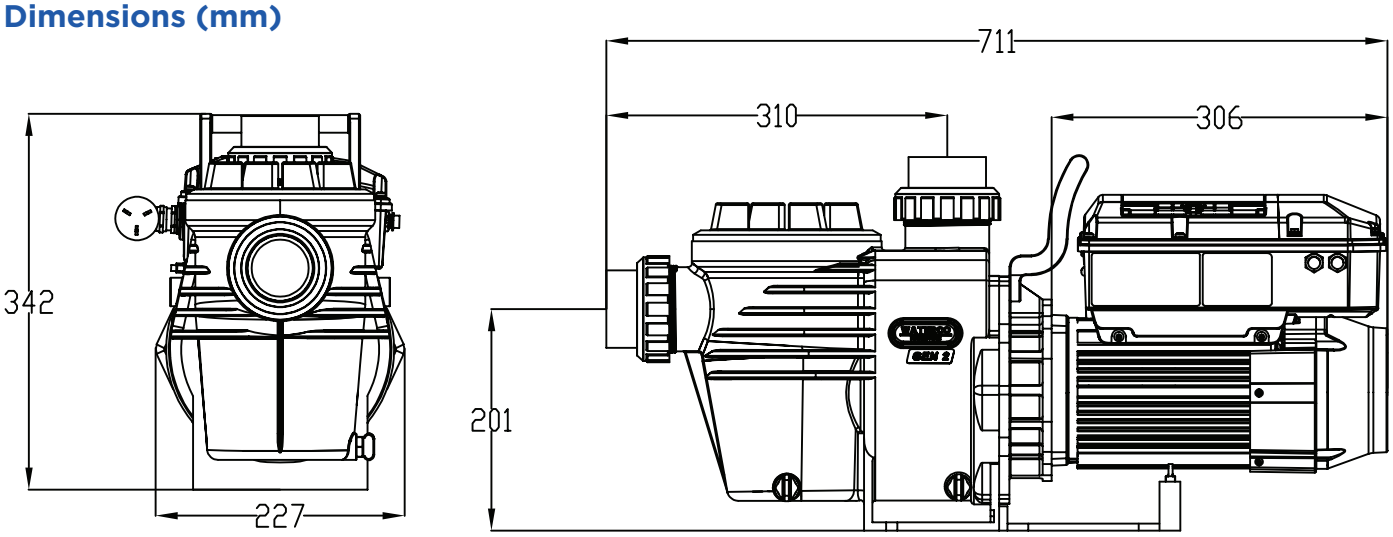

Warranty

Pumps	3 years (conditional)*
Pump wet end and motor	3 Years
*Mechanical seal, impeller & diffuser, basket, O-ring and capacitor	2 Years
Labour applications	1 Year

Please refer to Waterco's warranty terms and conditions

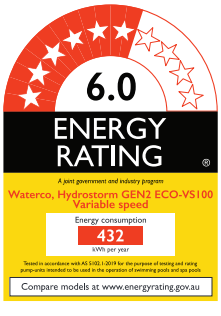



WATERCO

water, the liquid of life






Waterco pioneers reliable solutions for healthy, safe water environments, which are used in residential, commercial and industrial applications in over 40 countries.

Established in 1981, it has since become a global brand recognised for designing and manufacturing filtration and sanitisation innovations for the swimming pool, spa, aquaculture, and water purification sectors.

CONTACT WATERCO

Waterco's head office is situated in Sydney, Australia with international offices, manufacturing plants and warehouses located in Australia, New Zealand, Malaysia, Indonesia, Singapore, China, Vietnam, USA, Canada, UK and the United Arab Emirates.

OFFICES - AUSTRALIA

NSW - Sydney (Head Office)
Tel: +61 2 9898 8600

QLD - Brisbane
Tel: +61 7 3299 9900

VIC/TAS - Melbourne
Tel: +61 3 9764 1211

WA - Perth
Tel: +61 8 9273 1900

SA/NT - Adelaide
Tel: +61 8 8244 6000

ACT Distribution
Tel: +61 2 6280 6476

OFFICES - OVERSEAS

Waterco (Europe) Limited
Sittingbourne, Kent. UK
Tel: +44 (0) 1795 521 733

Waterco (USA) Inc
Augusta, Georgia, USA
Tel: +1 706 793 7291

Waterco Canada
Boucherville, Quebec, Canada
Tel: +1 450 748 1421

Waterco (NZ) Limited
Auckland, New Zealand
Tel: +64 9 525 7570

Waterco (C) Limited
Guangzhou, China
Tel: +86 20 3222 2180

PT Waterco Indonesia
Jakarta, Indonesia
Tel: +62 21 4585 1481

Waterco Singapore Intl Pte Ltd
Singapore
Tel: +65 6344 2378

Waterco (Far East) Sdn Bhd
Selangor, Malaysia
Tel: +60 3 6145 6000

Waterco Vietnam Company Limited
Ho Chi Minh City, Vietnam
Tel: +84 28 3622 7780

Waterco Middle East FZE
Dubai, United Arab Emirates
Tel: +971 (0) 4817 0250

LISTED ON ASX

SPASA AUSTRALIAN MEMBER

SCAN ME

www.waterco.com

Distributed by:

ZZB2194 09/26